RECENT RESEARCH ACTIVITIES AT THE DEPARTMENT OF STEEL STRUCTURES, UACEG, SOFIA

Nikolaj Rangelov
Assoc. Professor, Dr.-Eng., Head of Department
University of Architecture, Civil Engineering and Geodesy (UACEG),
Department of Steel and Timber Structures
Sofia, Bulgaria
e-mail: nick.rangelov@gmail.com

Stoyan Ivanov
Assist. Professor
UACEG, Department of Steel and Timber Structures
Sofia, Bulgaria
e-mail: stoyan_denkov@yahoo.com

Stanislav Raykov
Assist. Professor
UACEG, Department of Steel and Timber Structures
Sofia, Bulgaria
e-mail: raykov_fce@uacg.bg

ABSTRACT

The paper presents two recent research projects carried out in the testing laboratory at the Department of Steel Structures in Sofia.

The first part reports an experimental study on the behaviour of partially encased composite I-beams loaded in bending. The beams are modification of the well-known filler beam decks considered in EN 1994-2, in which the concrete in the tension zone is removed. No shear connectors of any type are used and no special treatment of the steel surface is provided, thus the longitudinal shear is resisted only by the natural bond in the contact surface. The experimental programme is based on four-point bending tests of four full-scale specimens. Various test results are presented and conclusions are drawn.

The second part of the paper reports an experimental investigation on nominally hinged column bases loaded in shear which is transferred to the concrete foundations by the anchor bolts. Four full-scale specimens are tested to investigate the behaviour and ultimate shear capacity under monotonic and cyclic loading. The idea to improve the cyclic behaviour by reinforcing the grout with steel fibres is proposed, and the test results prove the expected effect showing a substantial increase in both shear capacity and ductility.

1. PART I: EXPERIMENTAL STUDY OF PARTIALLY ENCASED I-BEAMS

1.1 Introduction

Steel and concrete are the two primary structural materials in modern construction, and in many cases they are combined to work together as for example in the classical reinforced concrete, as well as in the composite steel-concrete structures. The reliable shear connection between the two component materials plays a key role, and therefore various methods and different shear connectors have been proposed. On the other hand a possible solution is to use the natural bond between steel and concrete [1], as for example the so-called 'cased beams' considered in BS5400: Part 5 [2]. However, Eurocode 4: Part 2 [3] presumes use of shear connectors for composite beams. On the other hand, as an exception, the specific case of filler beam decks is included in [3] in which the composite action relies entirely upon the natural bond (*Fig. 1*).

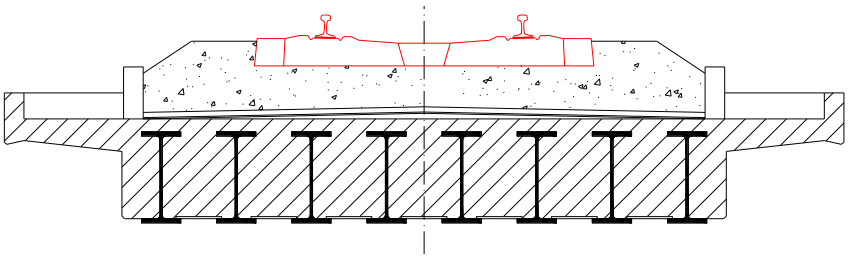

Fig. 1: Typical filler beam deck

The design of this system presumes a full interaction between steel and concrete which is guaranteed by specific requirements imposed by the code. Steel beams may be hot-rolled profiles or welded girders, spaced at maximum 750 mm on centre. The structure is applicable both for road and for railway bridges. Special design guidelines have been issued by UIC [4].

Filler beam decks possess some important advantages: smaller height-to-span ratio due to their high stiffness and resistance, easy and fast construction without scaffolding, enhanced local stability (the limiting width-to-thickness ratios for cross-section classification are increased), and full restraint against lateral-torsional buckling. However, a major disadvantage of this system may be found in its relatively larger weight. Therefore various modifications have been proposed [5, 6].

In this part of the paper a study is reported on a modification in which the steel beams are only partially encased; the 'useless' concrete in the tension zone (for positive bending moments) is removed thus reducing the weight and mass of the whole structure (*Fig. 2*).

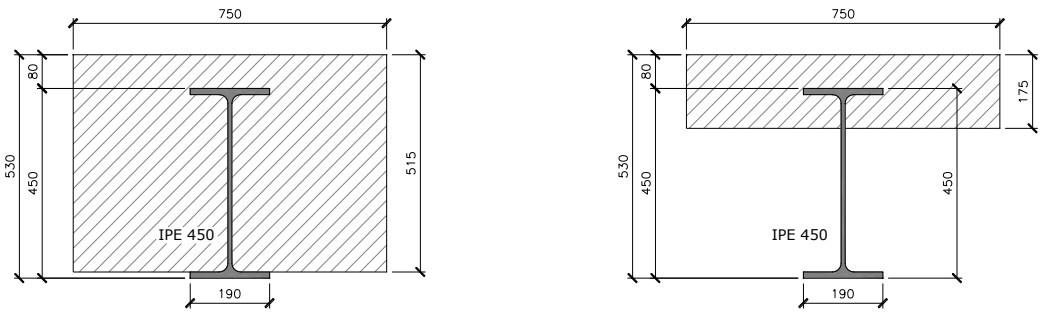

Fig. 2: Cross-sections: original filler beam and modified partially encased beam

It is believed that in this manner the above mentioned advantages are preserved. Another advantage may also be found in the fact that the holes for the reinforcement bars are moved to the compression zone or close to the neutral axis of the cross-section, thus enhancing the fatigue behaviour. Additionally, possible dowel action of the transversal rebar may contribute to the composite performance of the beams.

To study the behaviour and the efficient composite action of the modified partially encased beams, an experimental programme has been carried out, aimed at:

- investigating the behaviour and ultimate capacity of the natural bond between concrete slab and steel beam;
- estimating the elastic and plastic bending resistance of the modified beams;
- studying the effect of the slip in the contact surface on the bending stiffness.

1.2 Test specimens, experimental setup and loading history

In this experimental study four partially encased beams have been tested. The specimens are full-scale, composed of IPE450 profiles of steel grade S275, partially encased in R/C slab of concrete C25/30. The beam cross-section is shown in the following *Fig. 3*.

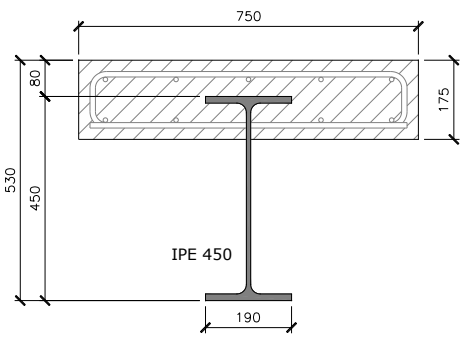

Fig. 3: Cross-section of tested partially encased beams

The test beams have been designed using the models of Eurocode 4 [2], assuming full interaction connection (*Fig. 4*). For comparison, the 'original' filler beam section is included in the figure to illustrate that, due to the position of the neutral axis both cross-sections have the same elastic and plastic design resistance.

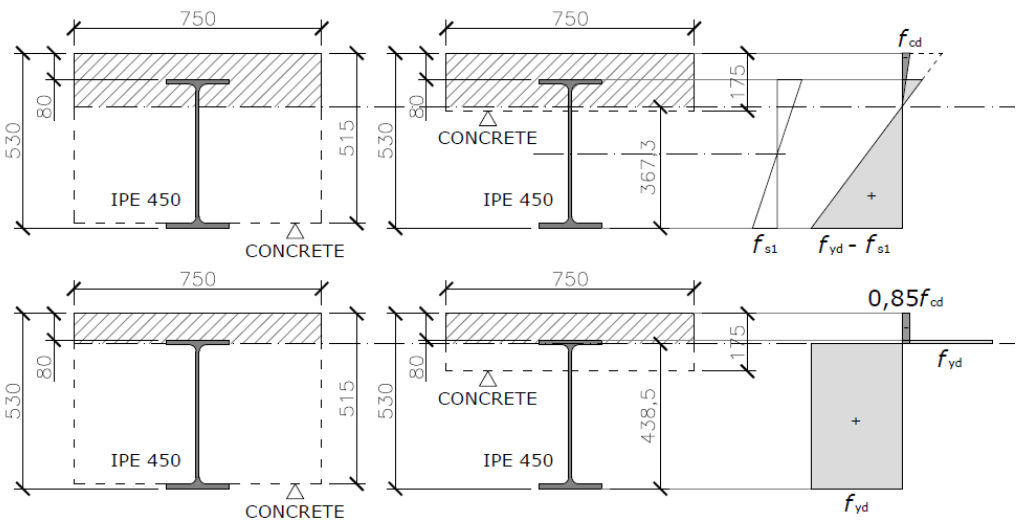

Fig. 4: Models for elastic and plastic design resistance

The experimental setup is illustrated in *Fig. 5*. The load is applied by a hydraulic jack and a load-distributing beam. Elastomeric bearings are used at the supports. Inductive displacement transducers are installed as shown in the figure. The strain gauges in the middle cross-section are shown in *Fig. 6*.

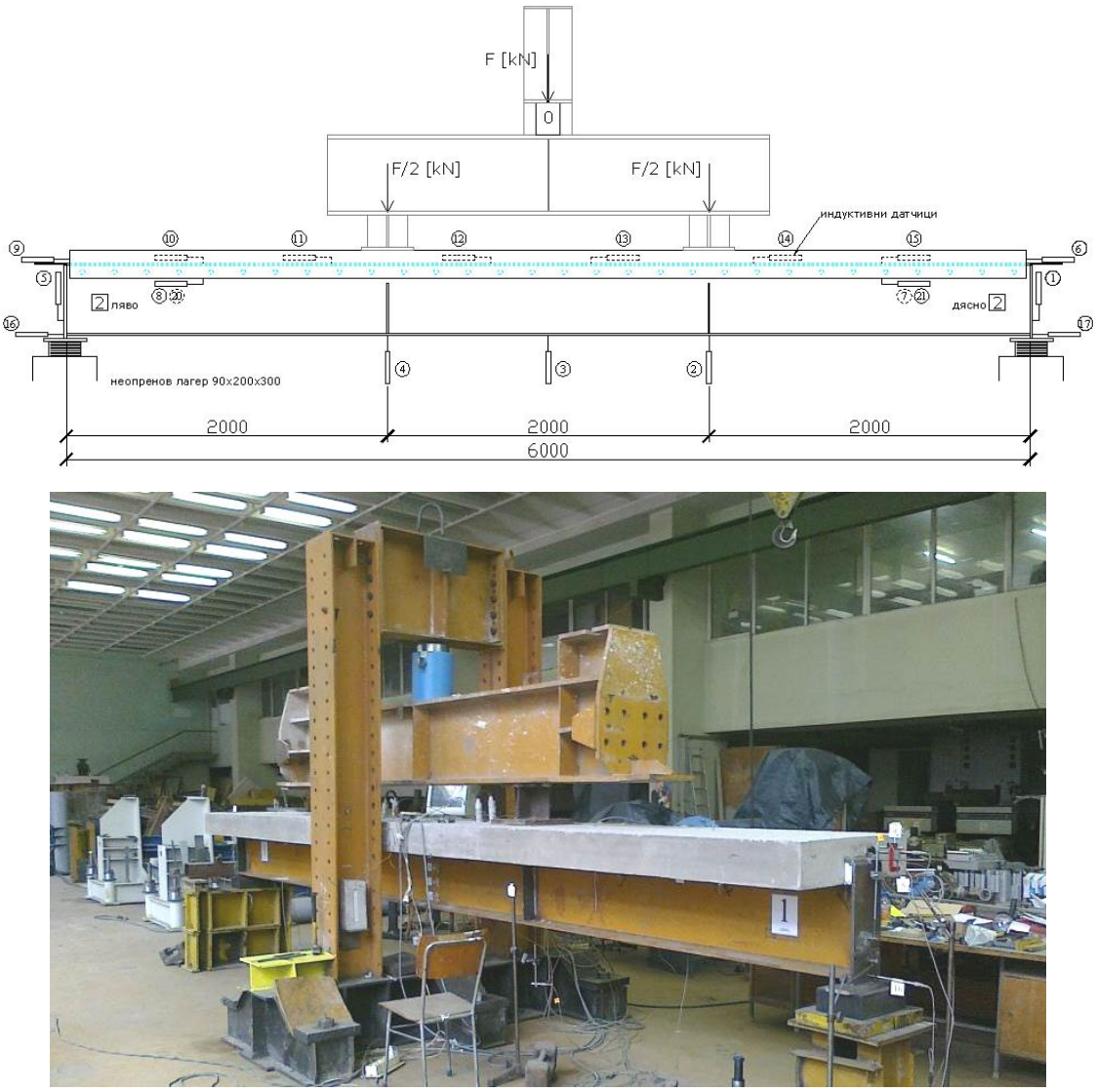

Fig. 5: Experimental setup

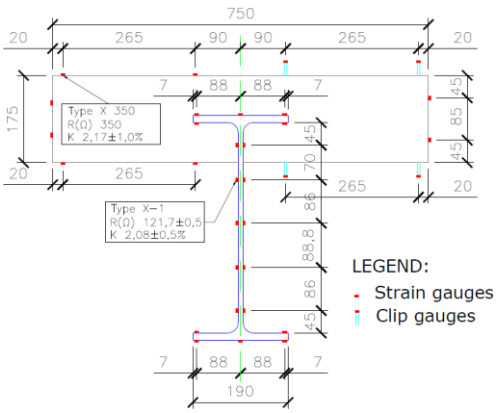

Fig. 6: Strain gauges pattern in the middle cross-section

To investigate the behaviour of the concrete-to-steel shear connection, the slip is measured by inductive displacement transducers located in special openings in the concrete slab as shown in *Fig. 7*.

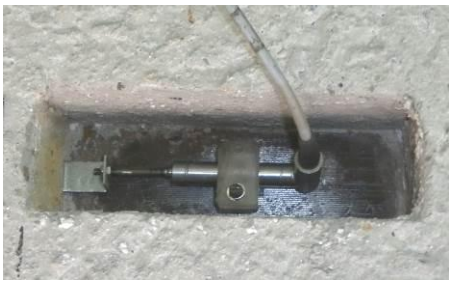

Fig. 7: Setup for concrete-to-steel slip measurement

A total of four specimens have been tested. However, due to the symmetry of the setup it may be considered that actually 8 equivalent specimens have been studied. In two of the specimens (O1 and O2) the reinforcing bars, crossing the beams through holes in the web, have been deliberately 'isolated' to avoid any dowel effect (*Fig. 8*), while in the rest two specimens (O3 and O4) no special care has been taken in that context.

Fig. 8: Reinforcement details of test specimens

The loading protocol is illustrated in *Fig. 9*. After a preliminary heat-up, the specimens were loaded monotonically with steps of $0{,}10F_{el}$ (F_{el} being the force corresponding to the calculated elastic bending resistance) until $0{,}80F_{el}$ was reached, with 20 min time intervals. On reaching $0{,}80F_{el}$, 2–3 hours pause was made, and the loading continued with smaller steps (0,05 to 0,02 F_{el}) until failure.

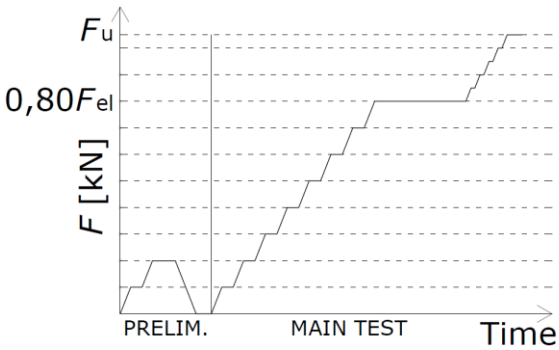

Fig. 9: Loading protocol

1.3 Experimental results

Within the focus of the investigation, the most interesting test results are those concerning the behaviour and the ultimate capacity of the natural adhesive bond between the concrete slab and the steel beam, and its effect on the behaviour and the bending resistance of the partially encased composite beams. Typical experimental load-slip curves are shown in *Fig. 10* for both types of specimens. A very interesting observation is well seen in the figure that the failure of the bond does not lead to significant degradation of the resistance. Indeed, in the case of deliberately 'isolated' reinforcement, just after the 'loss' of bond connection some drop in strength appears, however it is quickly compensated, and the final curve becomes quite similar to the other specimen type. Therefore, despite the fact that the effect of the dowel action of the reinforcement appears negligible, this effect seems to contribute to a 'smoother' transition after the failure of the adhesive bond. Nevertheless, the plateau in the curves demonstrates that the reached load and the corresponding resistance remain constant until large deformations when further increase of the applied load becomes practically impossible.

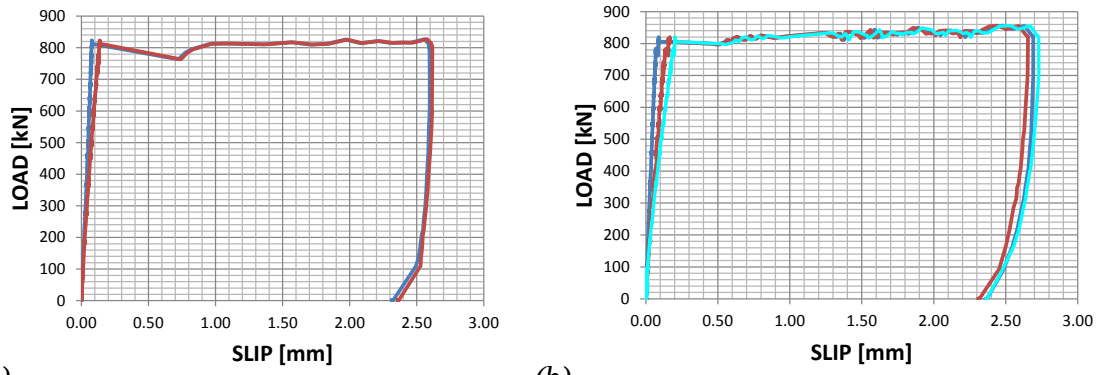

(a) *(b)*

Fig. 10: Typical experimental load–slip curves for (a) specimen O1 ('isolated' rebars) and (b) specimen O4 ('non-isolated' rebars)

Interestingly, the behaviour illustrated in terms of load-deflection curves seems very similar for both types (*Fig. 11*), without any significant drop in stiffness and strength. The transition from elastic to plastic behaviour is smooth, and the effect of the failure of the bond appears undistinguishable.

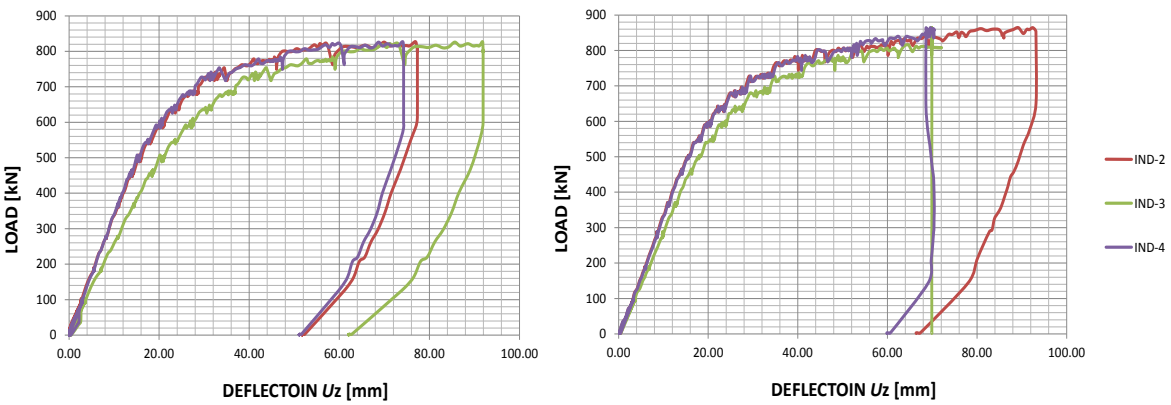

(a) *(b)*

Fig. 11: Typical experimental load–deflection curves for (a) specimen O2 ('isolated' rebars) and (b) specimen O3 ('non-isolated' rebars)

In the following *Fig. 12*, a typical distribution of the slip deformations along the beam length at different load levels is illustrated (specimen O3). Similar pictures are obtained for all the specimens.

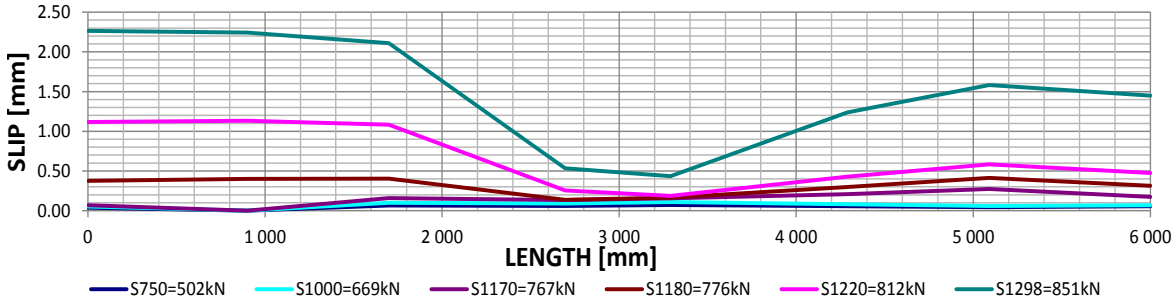

Fig. 12: Typical distribution of the slip along the beam length at various load levels

Other important results expected from the experimental programme are on the bending resistance of the partially encased composite beams at ultimate limit state. The following figures illustrate the stressed state observed for two specimens in elastic and plastic stage. In *Fig. 13* the results are obtained for specimen O1 with 'isolated' transversal reinforcing bars, while in *Fig. 14* the results present the stressed state in specimen O3.

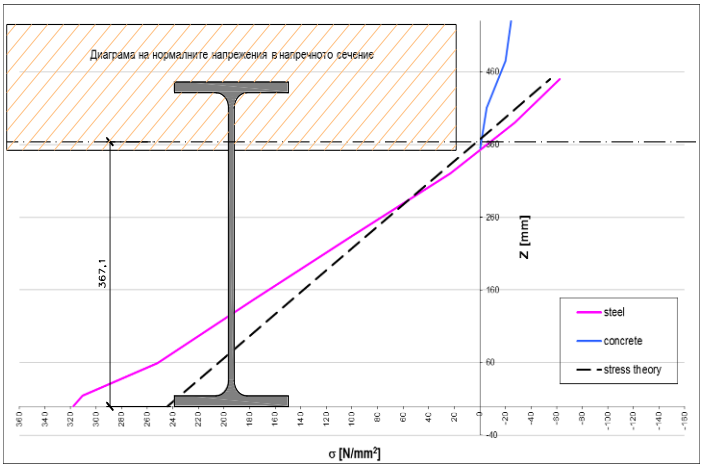

Fig. 13(a): Stress distribution at first yield of steel, specimen O1, M = 460 kNm

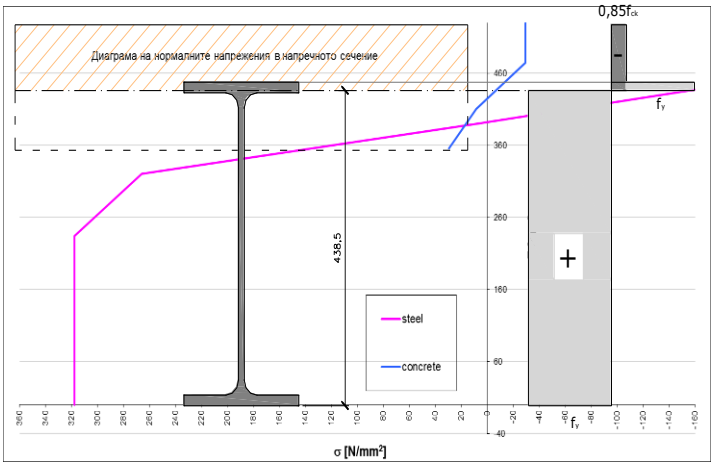

Fig. 13(b): Stress distribution at maximum load, specimen O1, M = 770 kNm

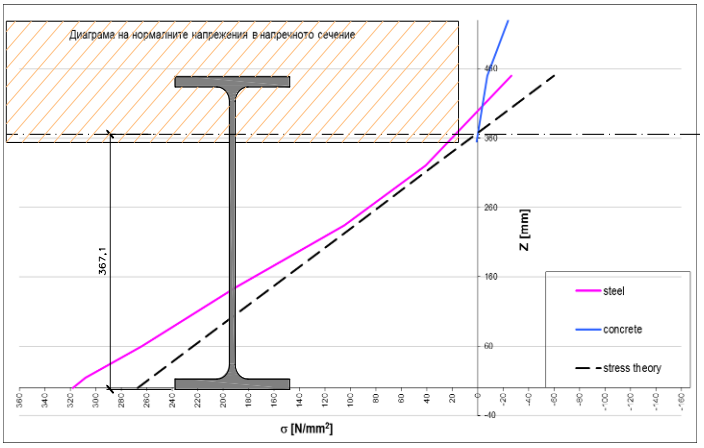

Fig. 14(a): Stress distribution at first yield of steel, specimen O3, M = 502 kNm

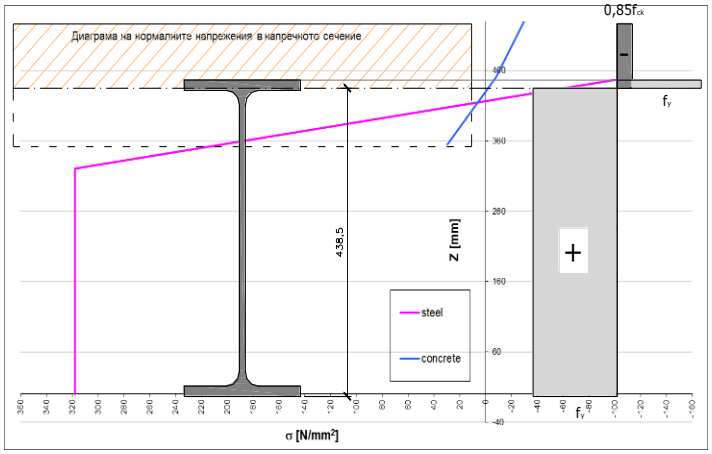

Fig. 14(b): Stress distribution at maximum load, specimen O3, M = 864 kNm

1.4 Conclusions

An experimental programme has been carried out on partially encased composite beams. From the test results the following conclusions may be drawn.

Elastic behaviour:

- In all test specimens a good correspondence between the measured stresses in the steel beam and the theoretical linear distribution is observed.
- The neutral axis position estimated experimentally is in good agreement with the theoretical, based on the full interaction model. Therefore it may be concluded that the natural bond provides practically full interaction between steel and concrete.

Plastic behaviour:

- In all the test specimens almost complete plastification in the middle cross-sections has been attained.
- When approaching the plastic resistance, the neutral axis expectedly is shifted upwards, close to the theoretical position. Thus the lowest layers of the concrete slab enter in the tension zone and accordingly cracks become well seen.
- The failure of the bond connection appears at loads that are lower than the maximum load reached, however in all specimens the plastic resistance may be considered to be practically attained.

The behaviour of both specimen types shows no substantial difference. Therefore it may be concluded from this study that the effect of the concrete dowels formed when the concrete fills the holes in the web plus the 'direct' dowel action of the transverse reinforcement provide a modest contribution in resisting the horizontal shear at the steel-to-concrete interface. It seems that it is the natural bond which mostly develops the composite action. On the other hand, no drop in strength is observed after the loss of that bond, which means that even after substantial slip deformations the interaction between steel and concrete remains efficient. This is due to the fact that, firstly, the separation of the two materials is prevented by the reinforcement, and, secondly, when slip occurs, pressure between concrete and steel produced by the compression struts in the strut-and-tie model, in which the tension is taken by the transverse reinforcement, provides considerable friction forces.

Finally, although the number of tests seems quite limited, the results show that the natural bond is reliable enough to provide an efficient composite action of partially encased beams both in elastic and in plastic stage. It seems that the bond on web contact surfaces plays less important role in the total shear connection, and therefore removal of the 'useless' concrete in the tension zone does not deteriorate the bending resistance. Similar conclusion has been indirectly proven in [7] where when testing filler beams with T-sections instead of I-beams, insufficient bond is reported.

2. PART II: EXPERIMENTAL INVESTIGATION OF COLUMN BASES LOADED IN SHEAR

2.1 Introduction

The reliable behaviour and design of the structural joints in any steel structure undoubtedly plays a key role for the safety. In the overall load path, column bases are quite important providing the load transfer from the steel superstructure to the foundations. This is even more valid in seismic areas, where the earthquakes produce reversal lateral loads in the column base connections and cases of structural collapse due to inadequate design of column bases have been reported [8, 9]. Recent studies [10] indicate that in some structural systems subject to seismic impact a base plate connection may experience very large shear to moment ratios, such that failure is dominated by shear. However, most of the research on steel column bases has been focused on the moment–rotation characteristics of the connection and little emphasis has been put on the transfer of shear forces. Experimental investigations on shear transfer are limited and very often are dedicated to the behaviour of a separate component (e.g. friction between steel base plate and grout, isolated anchor rods, etc.). The current design provisions in Eurocode 3 for the transfer of shear forces in column bases have been proposed on the basis of a large experimental programme [11]. However, all those tests have been carried out under monotonically increasing load, thus neglecting the importance of the cyclic behaviour of the connection.

In the present study the behaviour and ultimate capacity of typical nominally pinned column bases loaded in shear have been investigated. Four large-scale specimens have been tested under both monotonically increasing load and cyclic load with full deformation reversal. The influence of the ductility of the grout layer on the behaviour of column bases has been evaluated by comparing two types of grout: a typical cementitious composite for two of the specimens and the same composite reinforced with steel fibres, 1% by volume, for the other two specimens.

2.2 Test programme

The test specimens were designed so as to represent the behaviour of typical nominally pinned column bases. Four specimens were fabricated all having the same dimensions as shown in *Fig. 15*. The column stub was adopted relatively strong (HEB300) to avoid any significant premature deformations in the column and to provoke the failure in the base connection itself. The anchor bolts were 4∅16, embedded in reinforced concrete foundation blocks. The latter were anchored to the laboratory strong floor. The anchor bolts were fabricated of round steel S235JR with cut threads. The foundations were cast in place in the laboratory using commercial ready-mixed concrete specified as grade C25/30 (though it appeared to correspond to C30/37). The anchor bolts were sufficiently embedded in the concrete to prevent any type of brittle failure (pullout, breakout, pryout or blowout) of concrete.

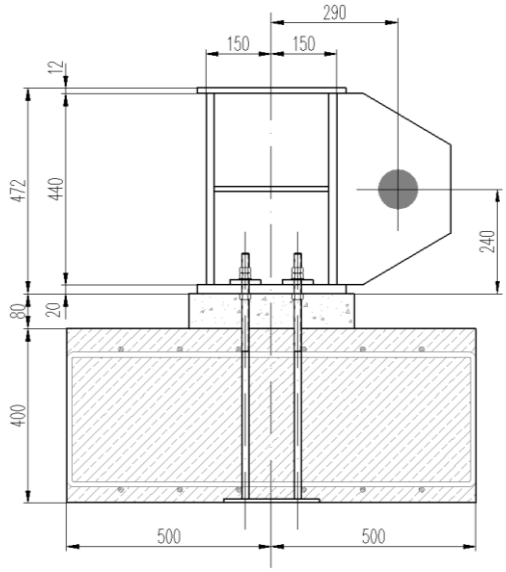

Fig. 15: Test specimens

The grout material was pre-mixed, pre-packed cementitious composite with excellent flow properties and high compressive strength (at least 60 MPa at 28 days). The 'improved' grout was the same composite reinforced with 6 mm long, 160 μm in diameter straight fibres with shape ratio (slenderness) λ = 37,5 and tensile strength 2200 MPa.

Two specimens were installed with regular grout and the other two specimens were with fibre-reinforced grout (FRG). Both specimen types were tested under monotonic (one of each type) and under cyclic loading until failure.

The experimental setup is shown in *Fig. 16*. The load was applied by a 500 kN hydraulic actuator at 240 mm above the base plate to simulate large shear load plus a relatively small moment, thus representing the actual partially restrained behaviour of a nominally pinned column base. No vertical load was applied to exclude the contribution of the friction between the base plate and the grout.

Oversized bolt holes in the base plates were used as in the typical practice in Bulgaria, with additional plate washers for the anchor bolts welded to the base plate to minimize the slip before the shear load was transferred to all bolts.

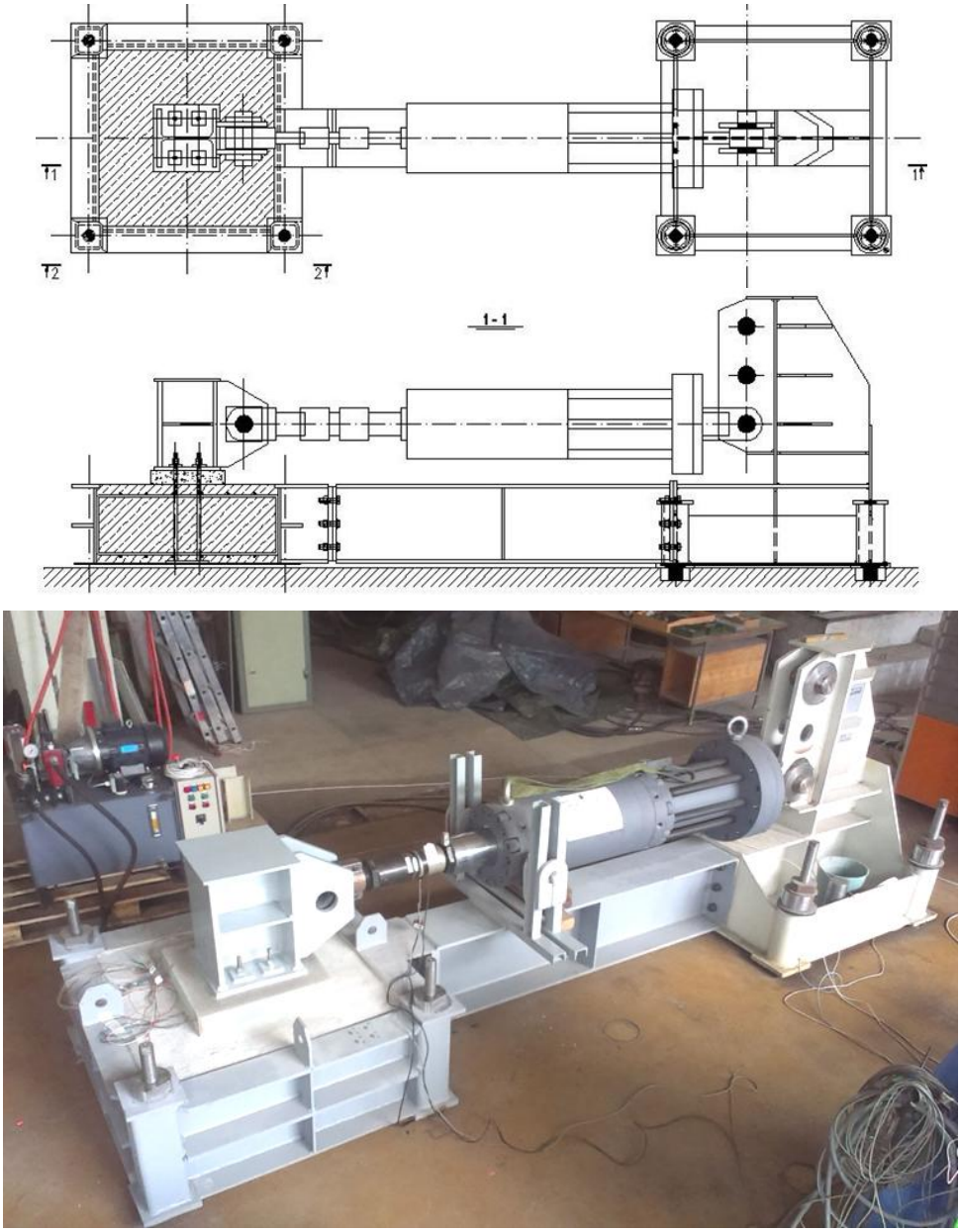

Fig. 16: Column base test setup

Two types of loading protocols were used (*Fig. 17*). For the cyclic tests the basic recommendations of ECCS "Experimental Assessment of Seismic Strength and Ductility of Structural Elements and Connections" were generally observed. The specimens were tested under displacement control (imposed displacements), with three or more complete reversal cycles at each displacement level. It is worth noting that comparable loading histories have been used in other similar experimental studies [12, 13]. The static tests were performed under monotonically increasing displacement.

A total of six displacement transducers were attached to the column base to measure displacements in lateral and vertical directions. Additionally, two strain gauges were attached to each anchor bolt in the portion between the top of the concrete surface and the bottom of the base plate, i.e. within the grout bedding layer. A typical instrumentation layout is illustrated in *Fig. 18*.

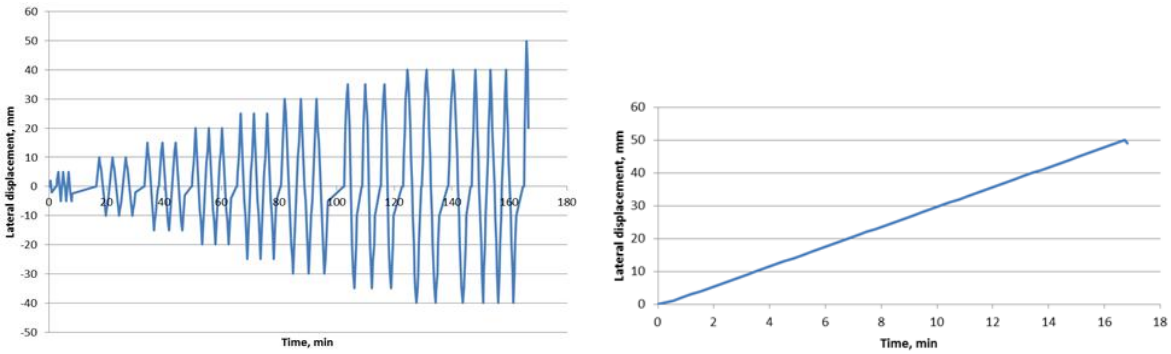

(a) *(b)*

Fig. 17: Loading protocols: (a) cyclic with full reversals; (b) monotonic

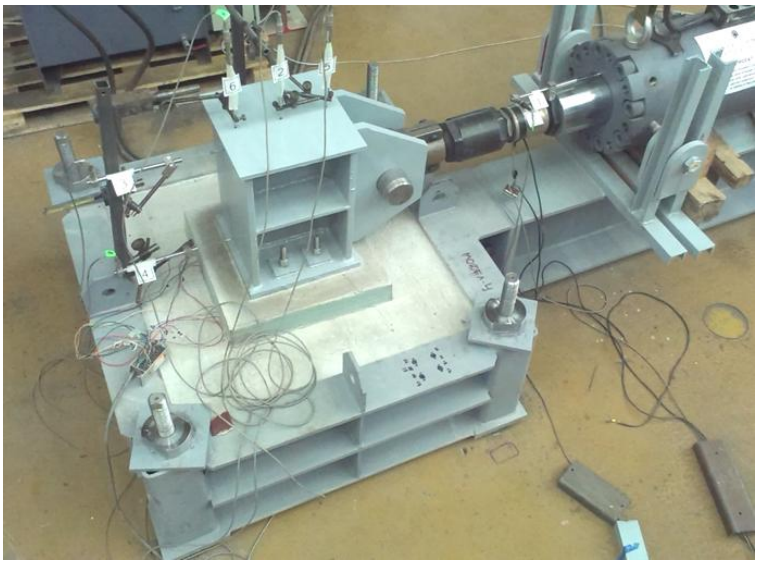

Fig. 18: Test setup – instrumentation

2.3 Experimental results

The test results are presented in terms of relationships between the lateral force, *F*, and the horizontal displacement, *Δ*. The load–displacement plots are shown in *Fig. 19* for the two specimens subjected to cyclic loading. The same plots obtained for the other two specimens under monotonic tests are given in *Fig. 20*.

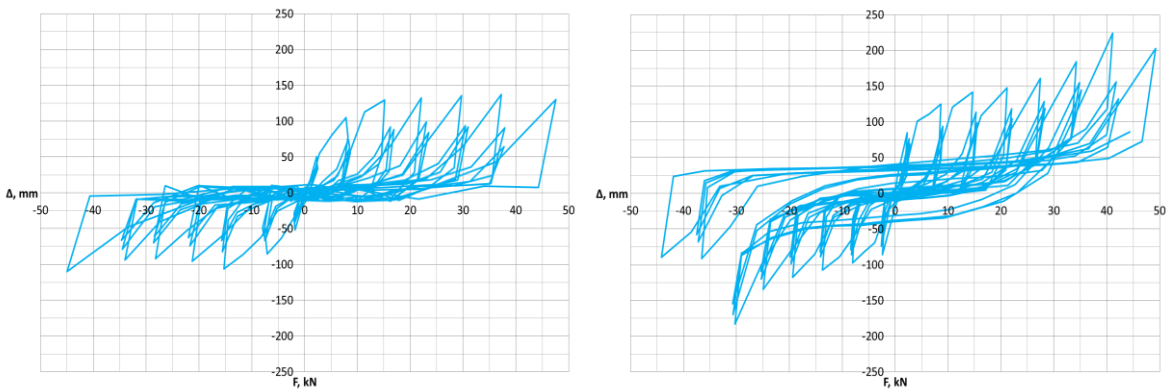

(a) *(b)*

Fig. 19: Load–displacement plots, cyclic tests: (a) regular grout; (b) FRG

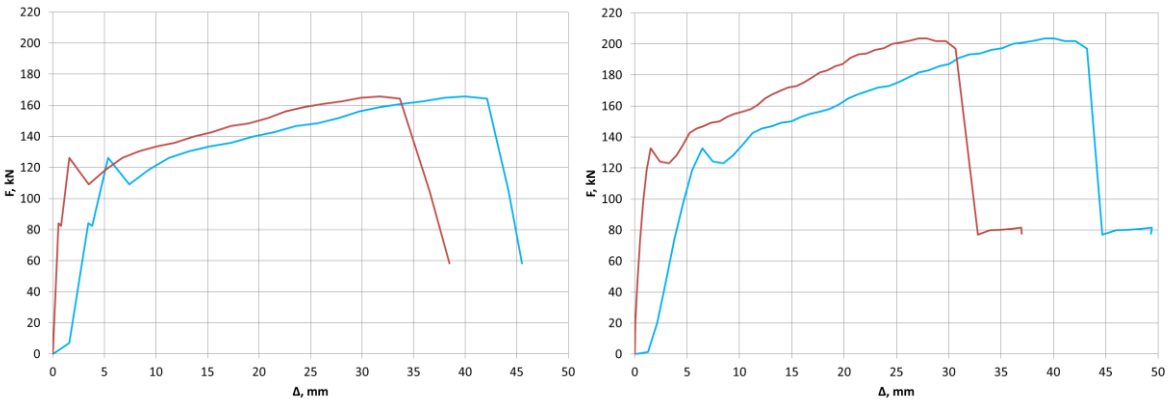

(a) *(b)*

Fig. 20: Load–displacement plots, monotonic tests: (a) regular grout; (b) FRG

In the cyclic tests both specimens (regular grout and FRG) exhibited similar hysteretic loops with well pronounced pinching effect. At the beginning of the test the anchor bolts were loaded predominantly in shear. However, with increasing the applied displacements, due to the bending moments, separation of the base plate from the grout occurred on the tension side and a new mechanism of shear transfer was formed. The shear force seemed to be transmitted mostly by shear in the anchor bolts in the compression zone as well as by friction between the base plate and the grout. Significant bending of the anchor bolts also occurred.

Finally, different failure mechanisms were observed in the two specimens. In the case of ordinary grout, a large crack formed around the anchor bolts which gradually increased and led to splitting of the grout bedding (*Fig. 21a*). On the contrary, in the case of FRG, due to the higher strength of the grout, the collapse was due to the anchor bolts failure after yielding, therefore the failure mode was proved to be more ductile (*Fig. 21b*). The total number of cycles was 27 while in the case of regular grout it was 22. The difference in the maximum loads at failure was quite substantial: 137/110 kN (in both directions) in the case of ordinary grout versus 225/183 kN for the fibre-reinforced grout, i.e. more than 60%.

(a) *(b)*

Fig. 21: Failure mechanisms: (a) regular grout; (b) fibre-reinforced grout

In the monotonic tests, similar behaviour has been observed for both specimens. As seen in *Fig. 20*, the initial stiffness in the elastic range of anchor bolts and the 'elastic' strength of both specimens seem quite similar. A drop in the strength occurred in both cases when the

anchor bolts yielded. However, the post-elastic behaviour differs substantially due to the different shear transfer mechanisms as described above. The ultimate loads were 166 kN in the case of ordinary grout and 204 kN for the fibre-reinforced grout.

2.4 Conclusions

A test programme has been carried out on typical column bases loaded in shear. The specimens have been tested both under monotonic and cyclic loading with displacement controlled cyclic reversals. The study has been focused on the influence of the grout bedding on the ductile behaviour and ultimate capacity. In this context, the idea of reinforcing the regular non-shrinking grout with steel fibres is proposed.

From the experimental study the following conclusions may be drawn.

- The monotonically loaded column bases exhibit dual behaviour which is characterised by high initial stiffness as long as the anchor bolts work predominantly in shear and bearing against the base plate; however, much lower stiffness is observed in the second stage, when a new load-carrying mechanism is formed and the anchor bolts appear loaded in tension and bending in the range of plastic deformations and strain hardening.

- The hysteretic behaviour of the column bases is characterised by pinched hysteretic loops. The pinching of the hysteretic loops is mostly due to the fast damage of the grout near the anchor bolts. Therefore the influence of the fibre-reinforced grout on the behaviour of the connection is considerable, especially when cyclic loading is applied.

- The ultimate behaviour of column bases loaded in shear depends substantially on the grout properties. The column bases with fibre-reinforced grout exhibit higher capacity and ductility; this effect is even more pronounced in case of cyclic loading. The improved behaviour of column bases with FRG is due to the different failure mechanism in which the collapse is associated with the more ductile behaviour of the anchor bolts instead of the brittle crushing of the non-reinforced ordinary grout.

ACKNOWLEDGEMENTS

Both research projects were funded by the *Research & Design Centre* of UACEG, Sofia, under contracts *БН-125/11* and *БН-143/13*. This support is gratefully acknowledged.

REFERENCES

[1] WATSON J., O'NEIL R., BARNOFF R. and MEAD E., "Composite action without shear connectors", AISC, *Engineering Journal*, Second Quarter, 1974.
[2] BS 5400: Part 5. Code of practice for design of composite bridges, BSI, 1979.
[3] EN 1994-2: Eurocode 4: Design of composite steel and concrete structures. Part 2: General rules and rules for bridges, CEN, 2005.
[4] UIC, "Empfehlungen für die Berechnung von Eisenbahnbrücken aus Walzträgern in Beton", UIC-Kodex 773, 5. Ausgabe, Mai 2010.

[5] KLAIBER F.W. and WIPF T.J., “An alternate shear connector for composite action”, *Mid-continent Transportation Symposium Proceedings*, Ames, Iowa, 2000.
[6] KONDA T.F., KLAIBER F.W. and WIPF T.J., “Construction of laboratory and field demonstration modified beam-in-slab bridges”, *Proceedings of the 2003 Mid-Continent Transportation Research Symposium*, Ames, Iowa, August 2003.
[7] KVOČÁK V. and KOŽLEJOVÁ V., “Research into filler-beam deck bridges with encased beams of various sections”, *Tehnički vjesnik*, Vol. 18, No. 3, 2011, pp. 385-392.
[8] TREMBLAY R., TIMLER P., BRUNEAU M. *et al.*, “Performance of steel structures during the 1994 Northridge earthquake”, *Canadian Journal of Civil Engineering*, 1995.
[9] KITAGAWA Y. and HIRAISHI H., “Overview of the 1995 Hyogo-ken Nanbu earthquake and proposals for earthquake mitigation measures”, *Journal of Japan Association for Earthquake Engineering*, 2004.
[10] GRAUVIRALDELL J., LEE D., HAJJAR J. and DEXTER R., “Synthesis of design, testing and analysis research on steel column base plate connections in high-seismic zones”, 2005.
[11] GRESNIGT N., ROMEIJN A., WALD F. and STEENHUIS M., “Column bases in shear and normal force”, *Heron*, Vol. 53, 2008.
[12] KRAWINKLER H., GUPTA A., MEDINA R. and LUCO N., “Loading Histories for Seismic Performance Testing of SMRF Components and Assemblies”, *SAC Joint Venture*, Report No. SAC/BD-00/10, Richmond, CA.
[13] GOMEZ I., KANVINDE A., SMITH C. and DEIERLEIN G., “Shear transfer in exposed columns base plates”, Report presented to the AISC, 2009.